DECENTRALISED WATER AUSTRALIA

Decentralised Wastewater Scoping Study for Cassilis

Upper Hunter Shire Council

Draft Report V1

28/10/2022

DOCUMENT CONTROL

Decentralised Water Australia Pty Ltd

Unit 2, 12 Channel Road Mayfield West NSW 2304

02 4960 2627

enquiries@decentralisedwater.com.au

Document Reference	R.0641.001.00.CassilisWastewaterOptions_DraftV1.docx
Report Type	Wastewater Servicing Options Report
Title	Decentralised Wastewater Scoping Study for Cassilis
Project Manager	Ben Asquith
Author(s)	Ben Asquith Huon Vardanega
Client	Upper Hunter Shire Council
Client Contact	Grahame Wilson
Client Reference	-

REVISION/CHECKING

REVISION HISTORY	DATE	CHECKED BY	ISSUED BY
R.0641.001.00	28/10/22	BAA	BAA

Acknowledgement

DWA acknowledges the Traditional Custodians throughout Australia and their continuing connection to land, water, culture and community, and pays respect to their Elders past, present and future.

Limitations Statement

This report and the associated services performed by Decentralised Water Australia (DWA) relate solely to the scope, budget, time, and access constraints as set out in the engagement agreement and quotation between DWA and the Client. DWA accept no liability for any use or reliance on this Report for any purpose not documented in this agreement and quotation by the Client. It has been prepared for the exclusive use of the Client and DWA accepts no liability for any use of or reliance upon this report by any third party.

The outcomes and recommendations contained in this report may have relied upon a range of information and data sources including information and discussions with the client, field investigations (limited to those described in this report), publicly available information and other sources. DWA have not verified the accuracy of third-party data and any inaccuracies or inadequacies may influence the accuracy of our findings. Similarly, both the inherent variability of environmental and ground conditions and the passage of time can lead to changes in ground conditions and other factors which may affect the accuracy of our findings. The Client should seek advice from DWA on the accuracy of findings after more than six months has passed or where changes in relevant conditions are known to have occurred. Data and information collected during field investigations should not be taken as accurate and complete for all depths and locations across the site.

The report and services have been completed in accordance with relevant industry standards, guidelines, and government legislation as of the date of publication unless stated otherwise. Where an engineering design is included, this design has been based on site and construction plans as provided by the Client and/or their representative and documented in the report. DWA accepts no liability for the impact of any changes to site conditions and / or building layout and extents on our design where DWA were not notified of the changes prior to completing our services. Additional costs may be incurred where work has already been completed.

Copyright © Decentralised Water Australia

Table of Contents

1 Introduction 7
1.1 Site Information 7
2 Project Background and Scope 9

3 Design Basis for Scoping of Options 11
4 Review of Current Sewerage Scheme Design 12

Table of Figures

Table of Contents

1 Introduction

This Decentralised Wastewater Scoping Study (Study) has been prepared by Decentralised Water Australia (DWA) for Upper Hunter Shire Council (Council). The report summarises the outcomes of high level review, investigation and analysis of decentralised wastewater servicing options for the town of Cassilis. It is based on the email request from Council dated 6 July 2022 and DWA's proposal Pr.0641.001.00 dated 25 July 2022.

Council is currently well progressed with design of a conventional sewerage scheme for Cassilis that is partially funded by Infrastructure NSW. However, cost estimates for delivery of this scheme have increased beyond the available funding following completion of detailed design. Consequently, Council are now considering alternative options for provision of improved wastewater management services to Cassilis that may be able to be delivered at an affordable capital and operating cost.

The purpose of this study was to undertake an initial appraisal of potential decentralised wastewater servicing strategies that may be feasible for Cassilis and capable of meeting cost and regulatory requirements. The outcomes of this study are preliminary in nature and based on available desktop information. Further investigation and design work would be required to confirm feasibility and refine cost opinions.

1.1 Site Information

Cassilis is located in the Upper Hunter Shire Local Government Area (LGA), approximately 40 kilometres northeast of Merriwa. The town consists of approximately 45 residential properties, a school, police station and a number of commercial enterprises including a hotel, post office, bowling club, caravan park and showground. The design Equivalent Population (EP) for Cassilis is 237 EP. Existing development is currently serviced by owner managed On-Site Sewage management Systems (OSSM) of varying age, condition and performance.

Cassilis drains to the Munmurra River that flows southwards along the eastern side of the village with some floodprone areas along the alluvial terraces. The town water supply is source from local groundwater via two bores located within the town itself with a local treatment plant in the northern section of Cassilis.

The general layout of Cassilis is shown in Figure 1.

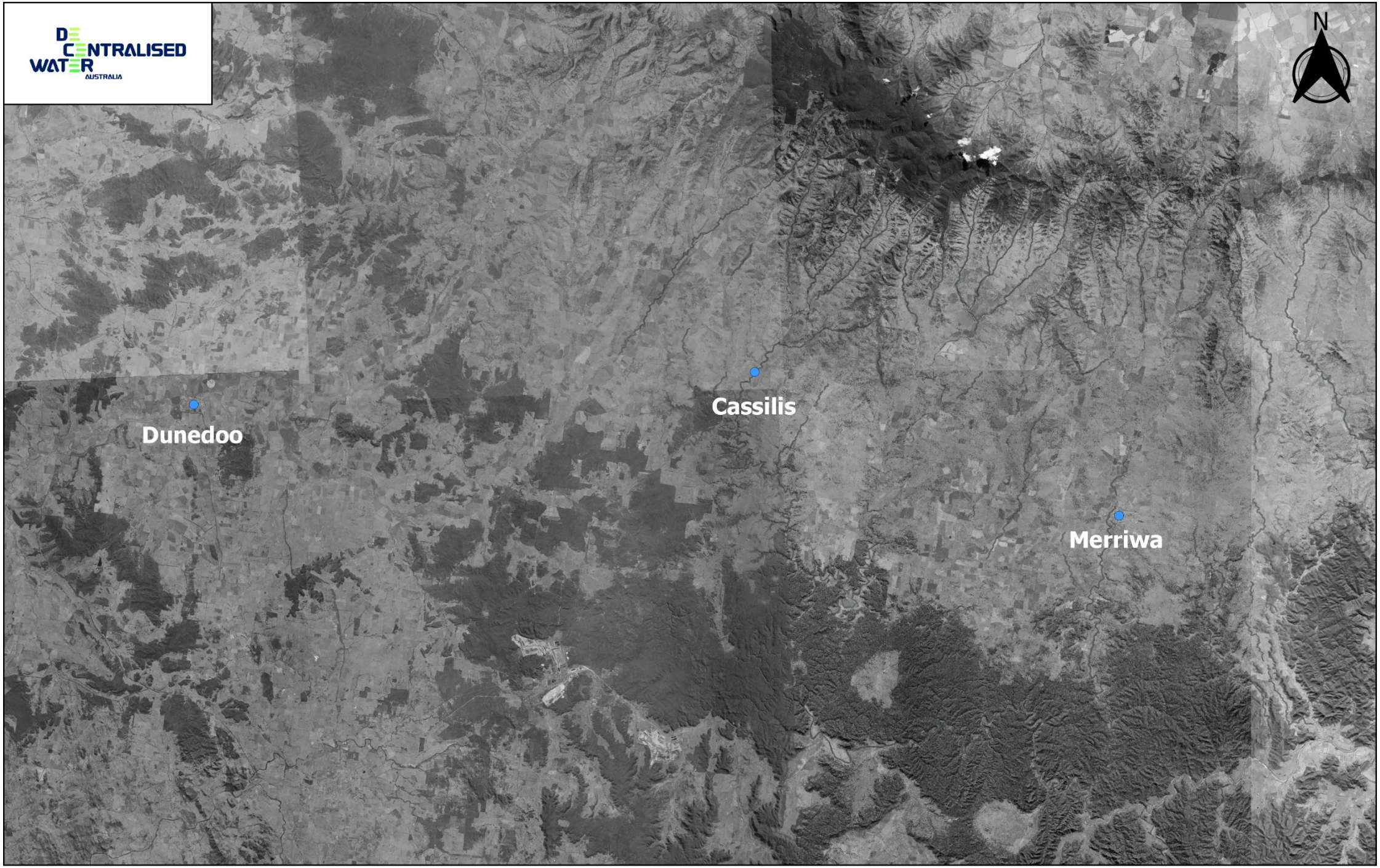

Figure 1 Locality Plan

0 10 20 km

Project: 0641
Drawn: 27/10/22
Revision: 00

2 Project Background and Scope

Council has been working towards the provision of a sewerage scheme for the currently un-sewered township of Cassilis located in the Upper Hunter Shire Local Government area. The primary driver for provision of this service has been operational, heath and environmental impacts and risks associated with the existing OSSM.

Several consultants' reports have been commissioned by Council over the past 8 years including:

- Cassilis sewage scoping study, EKA (2014)
- Review of Scoping Study for Sewer Service Options for Cassilis, Hunter H2O (2016)
- Integrated Water Cycle Management Issues Paper, PWA (2017)
- Final Concept Design Cassilis Sewage Scheme, Cardno (2019), and
- Detailed Design Report Cassilis Sewage Scheme, Cardno (2021).

Of relevance to this study are the outcomes from the report by EKA (2014) as stated in the Cardno reports. Cardno state that 'EKA compared options for sewer reticulation (including gravity, vacuum and pressure sewer), treated sewage disposal (including irrigation and discharge to the Munmurra River) and treatment (including oxidation ponds and package plants). The study also considered the do-nothing option (retain existing septic systems) and a common effluent drainage system (where septic tanks are retained, and septic tank effluent is collected and managed by a central facility). Based on a cost comparison, EKA recommended a centralised system with oxidation pond treatment and discharge via irrigation'.

Cardno also advise 'Hunter H2O (2016) reviewed the EKA (2014) study, and generally concurred with the findings. Hunter H2O noted that a pond based effluent system with irrigation of pasture would provide the most cost-effective solution. If a suitable site for the ponds and effluent irrigation could not be procured, the study recommended revisiting installation of a package plant with discharge to the Munmurra River'.

With reference to the Cardno reports, the current design solution consists of a predominantly traditional gravity reticulation system with approx. 6 pressure sewer connections and single pump station. The proposed treatment plant design comprises several facultative and maturation ponds, storage pond and irrigation pump station. Management of the treated effluent will be by way of surface irrigation of pasture on Council owned land totalling approx. 4.5ha.

Information has also been provided by Council on the general nature and performance of OSSM in Cassilis including guidance on risk mitigation options provided in a report titled "Options for On-site Wastewater Management Systems for Cassilis, Upper Hunter Shire" (Lanfax Laboratories, 2008) and a sample of OSSM inspection report from Council's regulatory inspection program.

These resources in conjunction available spatial and environmental data along with DWA's experience in decentralised wastewater solutions have formed the basis for the review into determining the suitability and feasibility of an alternative decentralised wastewater design.

2.1 Project Scope

This study is preliminary in nature and outcomes are based on the above information sources with limited, high-level rule of thumb design calculations used to determine broad feasibility. These options are therefore high-level servicing concepts accompanied by budget cost ranges for capital delivery (engineer's opinion of probable cost based on similar projects). The purpose of these servicing concepts and cost ranges is to inform initial decision making by Council prior to investment in more comprehensive investigation and design activities.

The scope consisted of the following project tasks.

- Project initiation and confirmation of project objectives at a meeting in Scone to familiarise DWA with the town and project context.
- Review of all relevant reports, published standards, guidelines and historical project data and outcomes.
- Evaluation of suitable and feasible decentralised options based on the outcomes of the literature review and decentralised industry experience.
- Preparation of simple servicing layouts depicting key infrastructure to accompany an indicative budget cost range for each option.
- Preparation of a preliminary risk register for each option.
- Summarising of outcomes in a scoping study report that includes the methodology, evaluation outcomes and potential alternative decentralised solutions.
- Meeting with Council staff to discuss the study outcomes and determine feasibility for further stages.

3 Design Basis for Scoping of Options

DWA has adopted the design basis documented in Section 7 of the Detailed Design Report (Cardno, 2022) for consistency in comparing options. The Sewage Treatment Plant (STP) flow parameters documented in Table 7-2 are largely consistent with DWA experience in the design of decentralised systems (Crites and Tchobanoglous, 1998). Peak Wet Weather Flows (PWWF) for reticulation sizing can differ however where small diameter flexible sewers are utilised due to observed wet weather peaking factors being low to non-existent.

Similarly, design STP loads (Table 7-4 in Cardno, 2022) have been adopted as the basis for raw sewage inflows to the STP. However, some decentralised collection systems do incorporate primary or secondary treatment on-site or in cluster locations.

4 Review of Current Sewerage Scheme Design

DWA has completed a high level review of the Detailed Design prepared for the Cassilis sewerage scheme (Cardno, 2022) to help understand drivers for high cost and to identify any design elements that would inform other approaches. The following points are a brief summary of findings.

- Design flows are ~100% higher than recent water use for the town and calculated wastewater generation based on actual occupancy.
- The gravity sewer design is efficient and logical and seeks to maximise the natural topography for conveyance. Notwithstanding, the limited number of serviceable properties over such a large area inevitably results in high cost.
- Whilst DWA also consider facultative lagoons and maturation ponds to be effective small town treatment processes, the topography and geotechnical constraints of the STP site do not lend it to a pond system.
- Geotechnical specifications for preparation of the ponds are substantial and come at a high cost.
- The minimum size of the ponds for geometry and maintenance means they are not an efficient construction for what is currently a ~20 kL/day ADWF.
- Slope adds to these higher costs
- There is some groundwater risk associated with the pond bases potentially intercepting a gravel aquifer.
- The STP and irrigation site are located in the flow path of a significant watercourse and catchment. This has created large costs to ensure rain events are diverted around.

5 Potential Decentralised Options

DWA have undertaken the following investigative actions to identify potential options for the Cassilis:

- Review of site investigations, Review of Environmental Factors and Detailed Design information to evaluate constraints and opportunities for decentralised servicing approaches.
- Desktop (GIS) analysis of general topography, water resources, soil and geology, existing development and other characteristics relevant to wastewater servicing.
- Field inspection to walk over Cassilis and the proposed wastewater servicing site(s) and familiarise DWA with on ground conditions.
- Consideration of the feasibility and cost effectiveness of a range of decentralised collection, treatment and effluent management approaches.
- Shortlist 2-3 options with the potential to provide an acceptable service and level of regulatory compliance at a lower cost to the conventional sewerage design prepared by Cardno (2022).

5.1 Shortlist of Options

The various options / elements considered;

- the scale of application (e.g. on-property, street, cluster or whole of town);
- the type of servicing element (e.g. collection, treatment, reuse, management, regulation); and
- available technologies for small town decentralised wastewater servicing.

The following is a brief description of key small scale decentralised servicing technologies and strategies that have been identified as a common sub-option for Cassilis. Further detail can be found in Crites and Tchobanoglous (1998), USEPA (1999), USEPA (2006), Crites *et al*, 2006, Brix and Arias (2005) and IWA (2017).

All of these technologies and strategies are more suitable for very small communities such as Cassilis and reflect on-site and small scale technologies. Conversely they are typically less suitable for larger urban sewerage and wastewater treatment projects as they lack any economy of scale.

5.1.1 Vertical Flow Subsurface Wetland (VFW)

VFW's are subsurface flow wetlands (reed beds) that are dosed vertically with unsaturated flow through granular media planted with macrophytes. They often consist of multiple cells that are intermittently dosed and rested to encourage both aerobic and anaerobic biological processes. They are a relatively passive treatment process with minimal maintenance demands. VFWs are typically capable of producing advanced secondary effluent, depending on the characteristics of the media, hydraulic, solids, organic and ammonia loading rates.

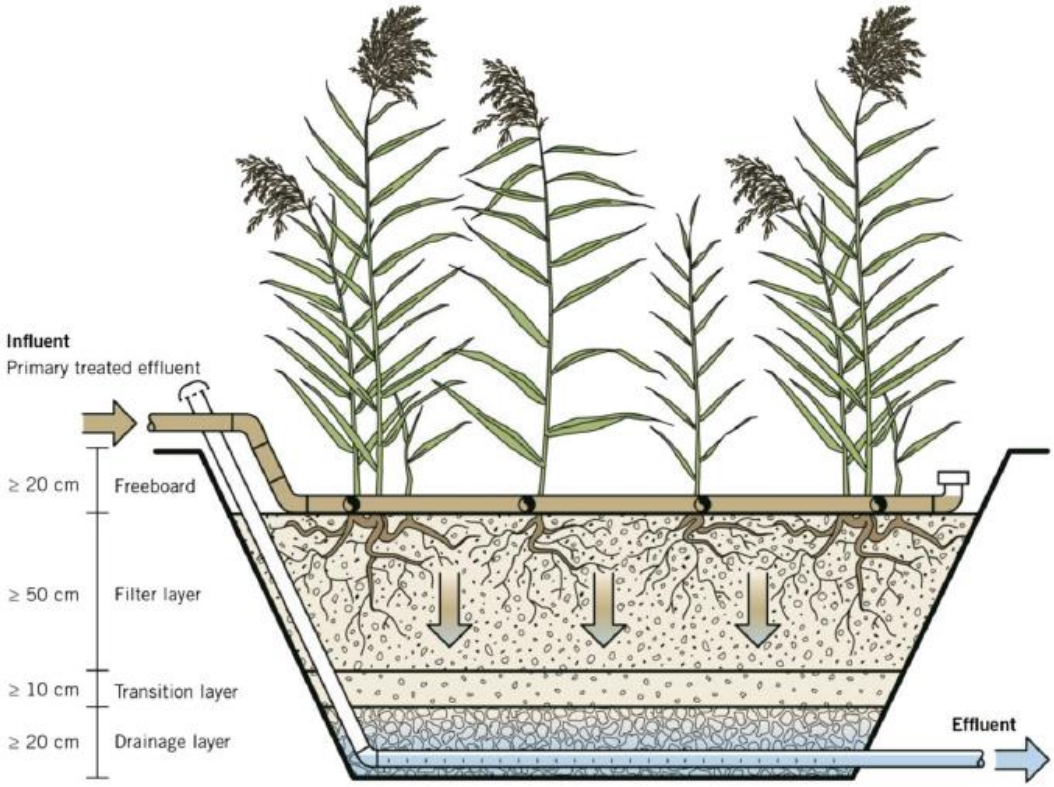

Figure 2 Schematic of a typical VFW from IWA (2017)

5.1.2 Recirculating Sand Filter (Packed Bed Reactor)

Recirculating Sand Filters (RSF's) are comparable to a VFW in that they treat wastewater through passive aeration as primary effluent trickles through a specified granular media such as sand, gravel or recycled glass. RSFs are not planted with macrophytes and rely on microbiological activity within a biofilm growing on the media for treatment. Media is typically finer and primary effluent is pressure dosed in frequent small doses with recirculation ratios of 2:1 to 5:1 typical. They are capable of producing advanced secondary effluent and can be configured for nutrient reduction (Crites and Tchobanoglous, 1998).

Figure 3 Example RSF in Pokolbin NSW (10 kL/day capacity)

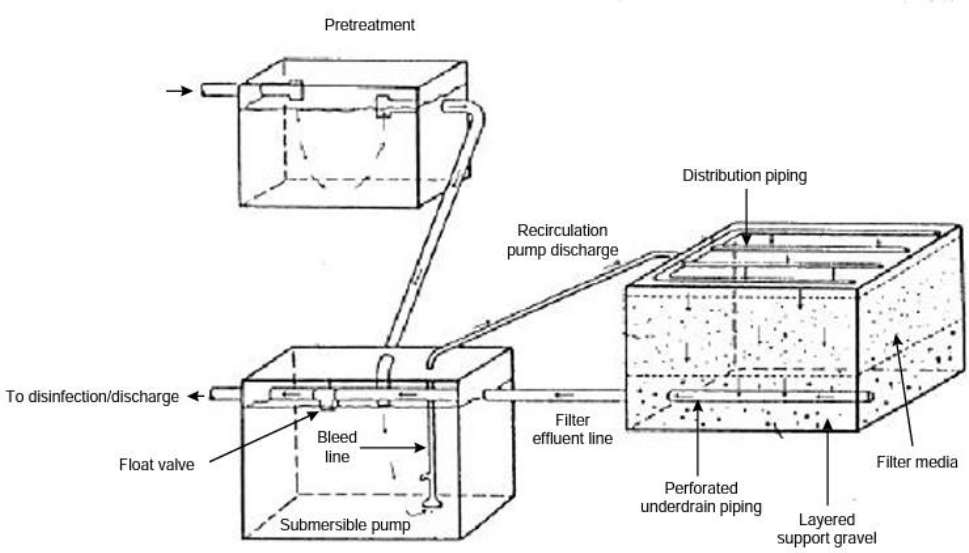

Figure 4 Schematic of RSF from USEPA (1999)

5.1.3 STEP/STEG Effluent (Pressure) Sewer

Septic Tank Effluent Pump (STEP) and Gravity (STEG) systems are an alternative collection system that can be effective for small communities where the economy of scale required for gravity sewerage and sewage pump stations may not be realised. They involve the provision of reliable primary treatment (typically BOD:TSS 180:80 mg/L) using watertight tanks sized for 8-12 year desludging frequencies (Crites and Tchobanoglous, 1998). This then enables conveyance to an STP via a pressure sewer that is only required to transport primary effluent. This enables lower minimum velocities, significantly reduced septicity and odour issues and reduced cleaning requirements compared to low pressure sewer. Pipes are typically Polyethylene flexible mains that can follow the contour of the land at minimum cover.

5.1.4 Partial Reuse Irrigation

It can be difficult and expensive to operate an effluent reuse scheme (irrigation) in a full reuse scenario. Alternatively, provision of an STP suitable for discharge to inland waters is equally challenging. There are hybrid approaches to effluent irrigation that seek to strike a balance between cost, operational simplicity and risk. They involve irrigation slightly above plant water demand in small intermittent doses that remain within the assimilative capacity of the irrigation site. They utilise the significant pollutant removal capacity of the soil, plant, water environment to ensure environmental and human health objectives are met.

Whilst it is a positive strategy to fully beneficially reuse effluent from a small town sewerage scheme, DWA would suggest this has played a partial role in the significant costs estimated for delivery of the current proposed scheme. Given the project is a t risk of not proceeding due to cost, a risk based approach would suggest the potential impact of a hybrid reuse / land application approach must be evaluated against the Business as Usual or Do nothing scenario where older septic systems impact on the health and amenity of the local community and potentially pollute local waterways.

Whilst such an approach can be challenging at larger scales, Cassilis is similar in size to many small commercial on-site systems approved in this configuration throughout NSW. In most regions of the world, climate prevents full beneficial reuse being considered as an option and the concept of 'land treatment' is used to describe this alternative approach to the point where most jurisdictions have a design manual for such systems (USEPA, 2006).

In order to provide options that were in the area of potential affordability for Council, a hybrid reuse / land application has been adopted for all decentralised options.

5.2 Options Summary

An initial screening process identified five (5) potential servicing options for Cassilis which are summarised in Table 1. They have been prepared to encapsulate a wide variety of decentralised options. In order to provide options that are within the cost range Council require to consider further, options include effluent management approaches that can be considered non-standard with respect to larger sewerage schemes. Notwithstanding, DWA's experience in the investigation, development and monitoring of such approaches over the last twenty years supports their ability to delivery significant improvements in human health and ecosystem protection, often whilst still capable of meeting the overarching performance objectives of legislation.

Table 1 Shortlist of Options

Option	Description
1: Gravity Sewer to Vertical Flow Wetland (VFW)	Retains the gravity sewer design prepared by Cardno (2022). Pond system replaced with either a Vertical Flow Wetland (VFW) or recirculating Sand Filter (RSF) which have a smaller footprint and cost. Partial reuse irrigation with reduced storage in tanks at STP site.
2: STEP/STEG to VFW	Septic Tank Effluent Pump (STEP) and Gravity (STEG) collection system providing primary treatment on-lot in watertight new septic tank enabling use of small diameter effluent pressure sewer at minimum cover. VFW or RSF treatment system. Partial reuse irrigation with reduced storage in tanks at STP site.
3: Cluster Treatment to Land Application	Small gravity sewers (welded) receiving sewage from clusters and directing to small secondary treatment systems with high Evapo-transpiration (ET) capacity that reduces residual secondary effluent. Management via a smaller facility closer to Cassilis (northern side).
4: Hybrid On-site / Cluster	Replacement of existing on-site systems with advanced secondary treatment with disinfection on-lot. Management of sustainable proportion on site via pressure dosed trenches and beds. Excess unable to be managed transferred to a smaller local facility for land application (northern side of Cassilis).
5: Managed On-site Upgrades (BPO)	Land capability assessment and designs for a Best Practicable Option (BPO) upgrade for all on-site systems in Cassilis undertaken by a single coordinated entity. Installation of BPO upgrades with oversight to ensure high quality outcome. Provision of remote monitoring and control to enable effective operation. Fund a Responsible Management Entity to periodically monitor inspect and maintain system.

The following subsections provide a summary of the general characteristics of each option.

Note on Cost Estimates

All cost information provided in this report is an Opinion of Probable cost based on similar projects. It does not represent a project specific cost estimate and therefore should not be considered an accurate representation of expected costs should an option be implemented in Cassilis. There are a range of factors that cannot be currently quantified that may influence an actual delivery cost. These cost opinions can be used to guide the reader on order of magnitude cost ranges and relative cost between options.

5.2.1 Option 1: Gravity Sewer to Vertical Flow Wetland or Sand Filter

This option retains the original sewerage concept with respect to collection and transport of raw sewage to the proposed Sewage Treatment Plant (STP) site. However, some alternative treatment approaches were considered and included in an attempt to manage the cost associated with geotechnical engineering requirements for the pond system. Table 2 summarises key assumptions and characteristics of Option 1 used in this options assessment. The physical layout of Option 1 is largely consistent with the design plans prepared by Cardno. However, the treatment system and wet weather storage footprint would be significantly smaller (approximately 50% of the 6ML storage as depicted in Figure 6).

Table 2 Key Elements of Option 1

System Element	Description	Probable Capital Cost
On-property	As per Cardno (2022) design. Decommission existing on-site systems and connection to gravity or pressure sewer.	$2.41 – $3.14M
Collection	As per Cardno (2022) design. Gravity sewer with small section of pressure. One sewage pump station and rising main to STP site.	
Treatment	- 200 kL primary tank - recirculation filtrate tank (~50 kL), - ~400m² VFW or 250 m² RSF, - UV disinfection and filtration (helminth) - Slightly reduced ancillary infrastructure (smaller footprint) - 200 kL wet weather bypass tank	$0.875 - $1.14M
Effluent Management	- ~1.5ML wet weather storage (30 days) via above ground steel tanks. - Irrigation as per Cardno (2022)	$0.51 - $0.66M
	Opinion of Probable Cost	**$3.80 - $4.94M**
Management	Comparable governance and management structures to the Cardno (2022) design. All options would require health and environmental risk assessment to justify non-standard irrigation approach.	

5.2.2 Option 2: STEP/STEG Effluent Sewer to Vertical Flow Wetland or Sand Filter

This option examined the potential effectiveness of on property primary treatment and flow modulation provided by STEP/STEG systems. While this approach does reduce the cost and risk associated with construction of the reticulation, this is offset by the cost of the STEP/STEG tanks. Their benefit typically lies in virtual elimination of wet weather inflows and a reduction in treatment infrastructure at the STP site. In this case, the STEP/STEG effluent sewer is likely to be lower cost than the gravity design but only by 10-15%. Figure 5 and Figure 6 provide a high level depiction of the location and extent of key system components for Option 2.

Figure 5 Option 2: STEP/STEG Effluent Sewer

0 50 100 150 m

Project: 0641
Drawn: 27/10/22
Revision: 00

Figure 6 Option 2: Indicative Treatment Footprint

0 50 100 150 m

Project: 0641
Drawn: 27/10/22
Revision: 00

Table 3 Key Elements of Option 2

System Element	Description	Probable Capital Cost
On-property	Decommission existing on-site systems and install new 4kL STEP/STEG tank with DN32 PE connection to effluent sewer (using boundary kit).	$2.16 – $2.80M
Collection	Horizontal directional drilling of ~DN63 PE100 PN16 pressure sewer to convey primary effluent only.	
Treatment	- Recirculation filtrate tank (~50 kL), - ~400m² VFW or 250 m² RSF, - UV disinfection and filtration (helminth) - Reduced ancillary infrastructure (smaller footprint)	$0.675 - $0.878M
Effluent Management	- ~1.5ML wet weather storage (30 days) via above ground steel tanks. - Irrigation as per Cardno (2022)	$0.51 - $0.66M
	Opinion of Probable Cost	**$3.34 - $4.35M**
Management	Comparable governance and management structures to the Cardno (2022) design. STEP units typically subject to annual inspection (work suitable for local on-site contractors). All options would require health and environmental risk assessment to justify non-standard irrigation approach.	

5.2.3 Option 3: Cluster Treatment Systems to Partial Reuse / Irrigation Site

This option explored a precinct or cluster based servicing concept whereby small sections of gravity sewer (small enough to enable tighter control of wet weather inflow) drain to four small scale cluster treatment systems. These system would utilise lined recirculating Evapo-transpiration beds call Rhizopods™. These systems achieve a high rate of ET and have been shown to cost effectively provide both secondary treatment whilst Evapo-transpiring 30-50% of effluent volumes. This then reduces the volume of effluent that needs to be treated at a central facility. As a cost management measure, Option 3 and 4 have assumed a smaller effluent management site would be sought closer to Cassilis to assist in managing sewer length for such small number of connections.

Figure 7 Option 3: Hybrid Sewer and Indicative Cluster Treatment System Locations

0 50 100 150 m

Project: 0641
Drawn: 27/10/22
Revision: 00

Figure 8 Option 3: Standalone Cluster Treatment System for Bowling Club and Showground

0 50 100 150 m

Project: 0641
Drawn: 27/10/22
Revision: 00

Table 4 Key Elements of Option 3

System Element	Description	Probable Capital Cost
On-property	As per Cardno (2022) design. Decommission existing on-site systems and connection to gravity.	$2.70 – $3.51M
Collection	- Retain ~1.4km of gravity sewer design. - Construct four small cluster treatment system (recirculating lined Evapo-transpiration beds) that reduce volume by 30-50% and produce secondary effluent. - Seven individual STEP units required. - Construct ~1.8km of recycled water pressure main to northern effluent management site (indicative only).	
Treatment	- Retained allowance for power upgrade and ancillary civil works. - Small shed at reuse site for UV and filtration	$0.18 - $0.23M
Effluent Management	- ~1.5ML wet weather storage (45 days) via above ground steel tanks. - Land application via subsurface irrigation or Wisconsin mounds	$0.3 - $0.39M
	Opinion of Probable Cost	**$3.18 - $4.13M**
Management	Non-standard governance and operational requirements due to use of small scale cluster treatment systems within the town. Could potentially be delivered as a Water Industry Competition Act (WICA) scheme or by a private water utility under contract to council. All options would require health and environmental risk assessment to justify non-standard irrigation approach.	

5.2.4 Option 4: Hybrid On-site and Cluster System

Option 4 seeks to utilise the limited receiving capacity of the properties in Cassilis for on-site wastewater management whilst providing infrastructure for reduced excess treated effluent volumes at a cluster land application site. A key aspect of this option is the premise that the design, construction and operation of the on-lot treatment systems would be managed by a Responsible Management Entity (e.g. a specialist contractor on behalf of Council or via a partnership under WICA).

Figure 9 Option 4: On-site Wastewater Systems, effluent sewer and indicative cluster location

0 50 100 150 m

Project: 0641
Drawn: 27/10/22
Revision: 00

Table 5 Key Elements of Option 4

System Element	Description	Probable Capital Cost
On-property	- Site specific land capability assessment - Prepare standard designs and property specific design requirements - Decommission existing on-site systems - Supply and install advanced secondary treatment systems with disinfection and remote monitoring and control. - Install pressure dosed beds in accordance with regulatory requirements (will typically be capable of managing 200-400 L/day). - Excess effluent to be pumped via pressure sewer to local land application site. - Bowling Club and Showground stand-alone managed on-site system.	$2.17 – $2.82M
Collection	- Horizontal directional drilling of ~DN50 PE100 PN16 pressure sewer to convey advanced secondary effluent only (1.5km).	$0.53 - $0.68M
Treatment	- Small shed at reuse site for UV and filtration	$0.04 - $0.05M
Effluent Management	- ~1.5ML wet weather storage (45 days) via above ground steel tanks. - Land application via subsurface irrigation or Wisconsin mounds	$0.26 - $0.34M
	Opinion of Probable Cost	**$3.00 - $3.89M**
Management	Non-standard governance and operational requirements due to use of on-property treatment and land application within the town. Could potentially be delivered as a Water Industry Competition Act (WICA) scheme or by a private water utility under contract to council. All options would require health and environmental risk assessment to justify non-standard irrigation approach.	

5.2.5 Option 5: Managed On-site Wastewater Systems (Best Practicable Option)

This option has been included to assist Council in considering the trade offs associated with a smaller investment in implementation of Best Practicable Options (BPO) for upgrade on existing on-site systems. This has been done in a qualitative manner based on available information for the purpose of this scoping study. However, it is possible to model upgraded on-site system performance for comparison to the Business as Usual case to determine if the cost benefit ratio justifies this as an effective investment for management of health and ecosystem impacts.

Based on the size of typical properties in Cassilis and the slope and soil conditions, strict compliance with on-site sewage management regulations is not possible. Similarly, this option does not 'future proof' wastewater management for Cassilis in the face of any development or population growth. However, it is likely that a large proportion of the existing wastewater currently generated could be managed effectively, resulting in a likely order of magnitude improvement in pollutant export. Both water use data and Census occupancy data suggest average wastewater generation is likely to be 350-400 L/day. The receiving capacity of many of the existing properties is anticipated to be in this area based on advanced secondary effluent to pressure dosed trenches or beds.

Risks would be minimised through the following:

- Provision of high level treatment including disinfection on all sites
- Intermittent pressure dosing of land application areas to maximise hydraulic capacity.
- Provision of connection point for eduction of excess loads from final holding tank (typically 0 – 30% of volumes resulting in 1-3 month eduction intervals).
- Coordinated land capability assessment and design process undertaken by a single entity to ensure a high quality outcome.
- Coordinated oversight of system construction.
- Provision of remote monitoring and control to enable an RME (e.g. specialist contractor on behalf of council) to manage system performance effectively.
- Allowance for some monitoring of health and environmental impacts.

Table 6 Key Elements of Option 5

System Element	Description	Probable Capital Cost
On-property	- Site specific land capability assessment - Prepare standard designs and property specific design requirements - Decommission existing on-site systems - Supply and install advanced secondary treatment systems with disinfection and remote monitoring and control. - Install pressure dosed beds in accordance with regulatory requirements (will typically be capable of managing 200-400 L/day). - Excess effluent to be stored in final effluent tank for eduction approx.. every 1-3 months (typical cost $200). - Bowling Club and Showground stand-alone managed on-site system.	$1.90 – $2.47M
	Opinion of Probable Cost	**$1.90 - $2.47M**
Management	Non-standard governance and operational requirements due to use of on-property treatment and land application within the town. Could potentially be delivered as a Water Industry Competition Act (WICA) scheme or by a private water utility under contract to council. All options would require health and environmental risk assessment to justify non-standard irrigation approach.	

6 Evaluation of Options

DWA has completed an evaluation of these options for Cassilis with the outcomes summarised in Table 7. Evaluation of the shortlisted options involved the following:

- Development of preliminary servicing layouts or configurations for each options to enable key components to be identified and approximately sized.
- High level evaluation of key infrastructure against the relevant regulatory and design standards (largely rule of thumb sizing or adoption of standard criteria from design codes).
- Preparation of an Opinion of Probable Cost (i.e. 'Engineer's estimate') based on other similar projects and current available cost rates for key components.
- Preparation of summary table that present key take home outcomes of a semiquantitative evaluation of the options.

Table 7 Decentralised Wastewater Servicing Options Evaluation

Option	Budget Estimate	Advantages	Disadvantages	Approval Pathway	Outcome
1 –Gravity Sewer to VFW/RSF	CAPEX: $3.80 - $4.94M 20-30% lower than current design Expected OPEX: Low	- Sustainable long term solution - Expected to be lowest OPEX - Comparatively low level of management and oversight required - Comparatively low environmental and human health risk - Will meet community expectations	- Higher CAPEX - Decentralised technologies less able to manage wet weather inflows - Greater biosolids management	S60	**Not Recommended**
2 – STEP/STEG Effluent Sewer to VFW/RSF	CAPEX: $3.34 - $4.35M 30-40% lower than current design Expected OPEX: Mod. Low	- Lowest CAPEX sustainable long-term solution - Comparatively low environmental and human health risk - Lower OPEX - Likely to meet community expectations - Simple biosolids management - Wet weather inflows avoided	- Moderate CAPEX - Requires an on-property tank (burden on property)	S60	**Potential Option**
3 – Cluster Treatment Systems to Partial Reuse Site	CAPEX: $3.18 - $4.13M 42% lower than current design Expected OPEX: Moderate	- Low CAPEX - No on-property infrastructure - Local reuse opportunities	- More complex system located in town - Successful implementation requires new effluent management site north of Cassilis - Higher OPEX than Option 1 and 2.	TBD	**Not Recommended**

Option	Budget Estimate	Advantages	Disadvantages	Approval Pathway	Outcome
4 – Hybrid On-site and Cluster System	CAPEX: $3.00 - $3.89M 45% lower than current design Expected OPEX: Mod. High	- Reduced volumes requiring treatment and/or irrigation - Lower CAPEX - Residents can reuse on-site	- Higher OPEX burden - Approval pathway unclear - Requires alternative irrigation site - Some constraints to growth - Likely to be less supported by residents	TBD	**Potential Option**
5 – Managed On-site Wastewater Systems	CAPEX: $1.90 - $2.47M 65% lower than current design Expected OPEX: Mod. High	- Lowest CAPEX - Efficient way to manage current risks.	- Unlikely to be supported by residents - More complex OPEX - Will not achieve full compliance. - Some eduction required - Non-standard approach	TBD	**Potential Option**

7 Key Outcomes of Study

There are a number of constraints that make the provision of a whole of town sewerage solution challenging for Cassilis. Of most significance are the lack of economy of scale, spread of houses and development and bio-physical constraints at the STP and irrigation site. A number of decentralised servicing options have been examined with three considered suitable for further investigation if deemed of value by Council.

Option 2 (STEP/STEG to VFW/RSF) represents the lowest cost option to maintain a whole of town sewerage service with all wastewater reticulated off properties to a central site. DWA are comfortable a Option 2 could be configured to satisfy regulatory requirements and achieve a high level of environment and health protection. There is some potential for the treatment (VSF/RSF) and wet weather storage to be staged to reduce CAPEX by ~15% for this option.

Option 4 (Hybrid On-site and Cluster System) requires each property to be burdened with an on-site secondary treatment system and a modest amount of pressure dosed trenches. However, some residents may benefit from the available water and provision of treatment on-site is cost effective for such a small town. Further work is required to confirm an appropriate location for the cluster land application site.

Option 5 (Managed On-site Wastewater Systems) is the lowest capital cost option identified for Cassilis. However, it requires residents to persist with on-site systems, albeit upgraded ones, on properties that are constrained. The biggest challenge for Option 5 is establishment of a Responsible Management Entity (RME) and determining an acceptable regulatory pathway for this servicing approach.

All options require further investigation to confirm feasibility, particularly Option 4 and 5.

8 References

National Health and Medical Research Council, National Resource Management Ministerial Council. (2011). *Australian Drinking Water Guidelines (NHMRC).* Commonwealth of Australia, Canberra.

National Resource Management Ministerial Council, Environment Protection and Heritage Council & National Health and Medical Research Council. (2009). *Australian Guidelines for Water Recycling: Managing Health and Environmental Risks (Phase 2): Stormwater Harvesting and Reuse.*

NSW Health. (2016). *New South Wales Private Water Supply Guidelines.*

SMARTER ADAPTIVE SOLUTIONS

DECENTRALISED WATER AUSTRALIA

enquiries@decentralisedwater.com.au

(02) 4962 2067

www.decentralisedwater.com.au